YDK-020E4F31D-01

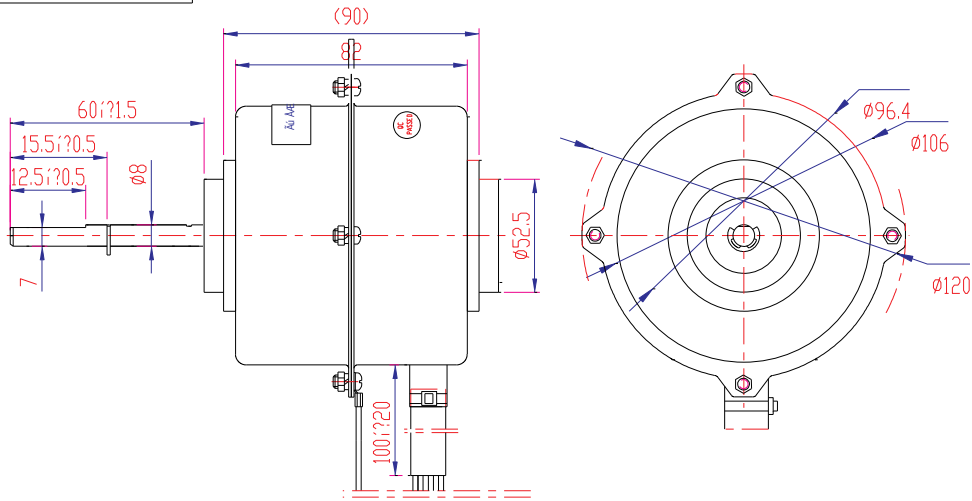

YDK-50B-4

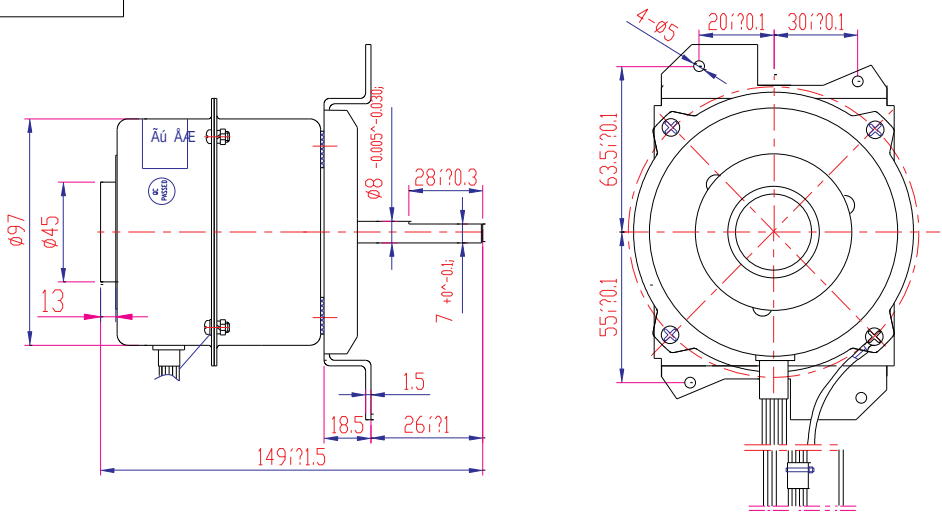

Motor Model	Voltage (V)	Frequency (Hz)	Speed (rpm)	Output Power(W)	Capacitance (¡ÌF)	Poles (P)	Use
YDK-020E4F31D-01	220	50	1120	20	2.0	4	Air-Conditioner fan motor
YDK-50B-4	230	50	1250	47	2.0	4	Air-Conditioner fan motor