## BOM-ZYQ-68F

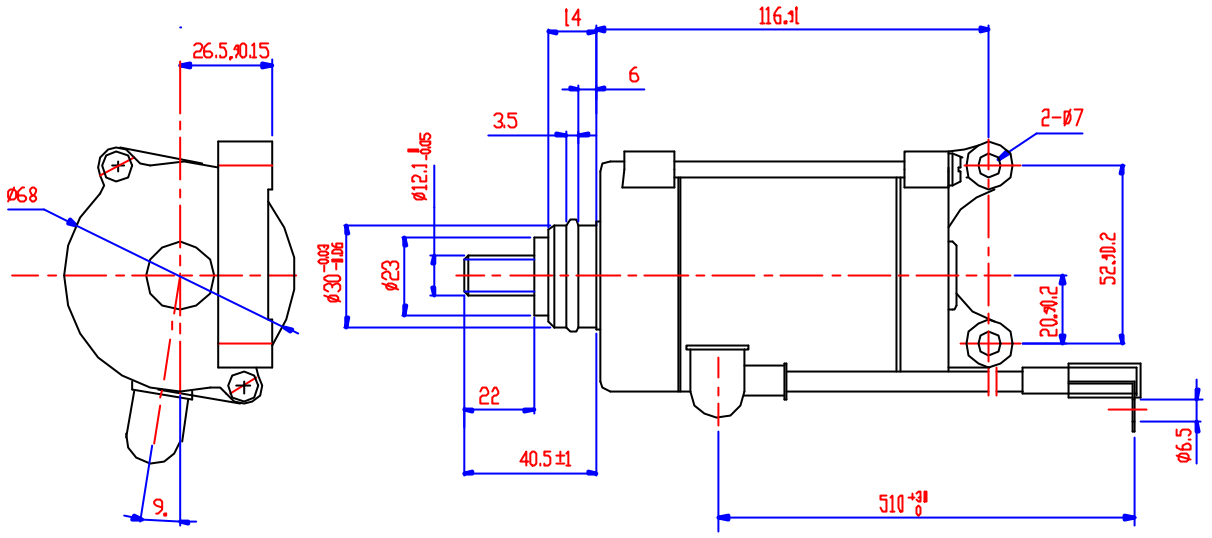


## BOM-ZY-101-1

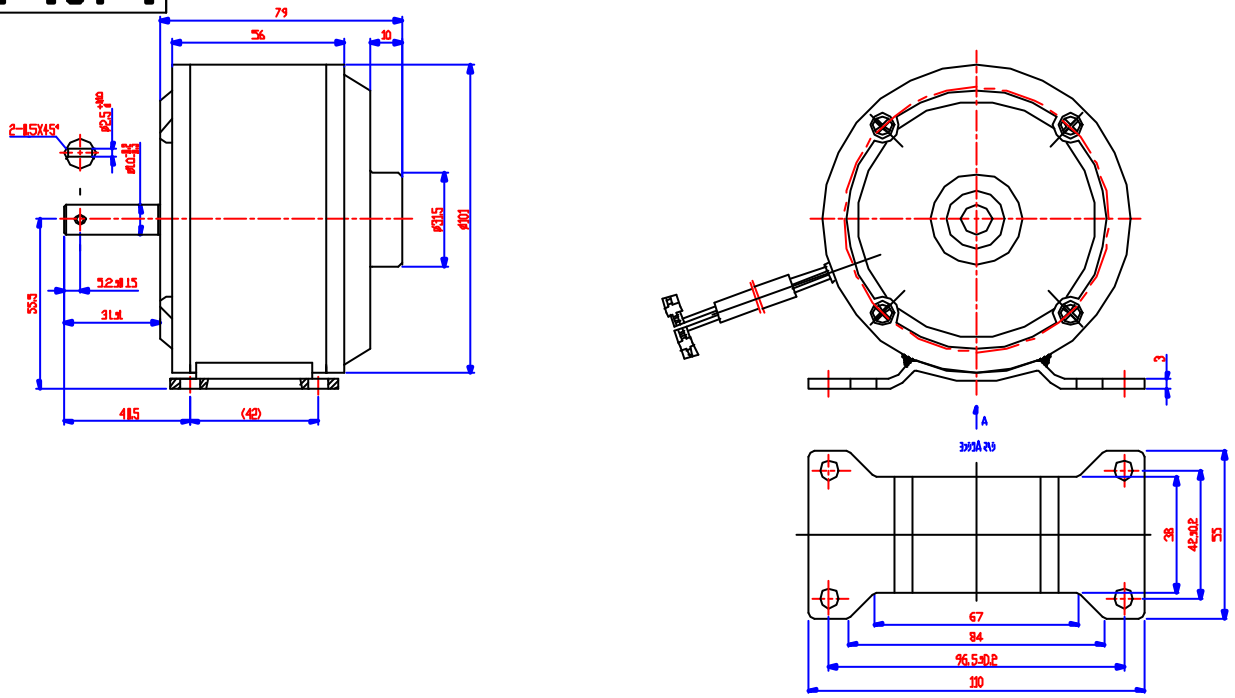


| Motor Model | Speed at Max Efficency (rpm) | Max-Operating Voltage (V) | Current at Max Efficiency (A) | Max Tourque ( N.m) | Use |
|---|---|---|---|---|---|
| BOM-ZYQ-68F | 4000 | 12 | 120 | 2.0 | Motorcycle start motor |
| BOM-ZY-101-1 | 2700 | 12 | 14.5 | 0.8 | Electricity scooter motor |