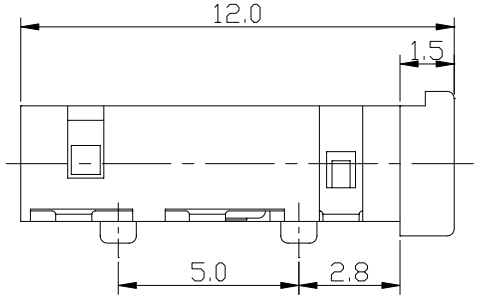

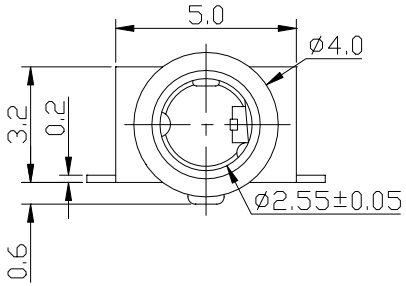

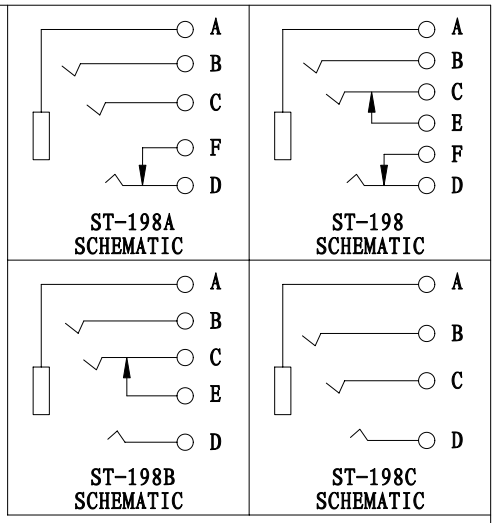

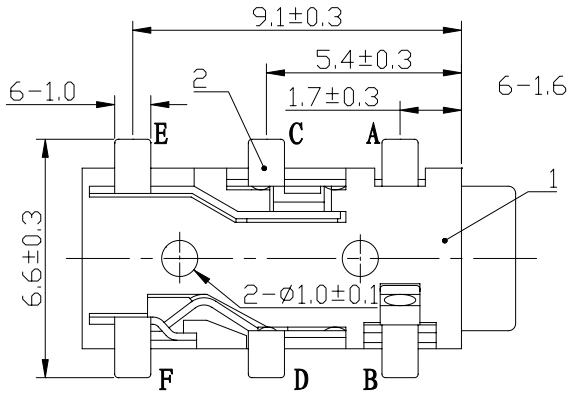

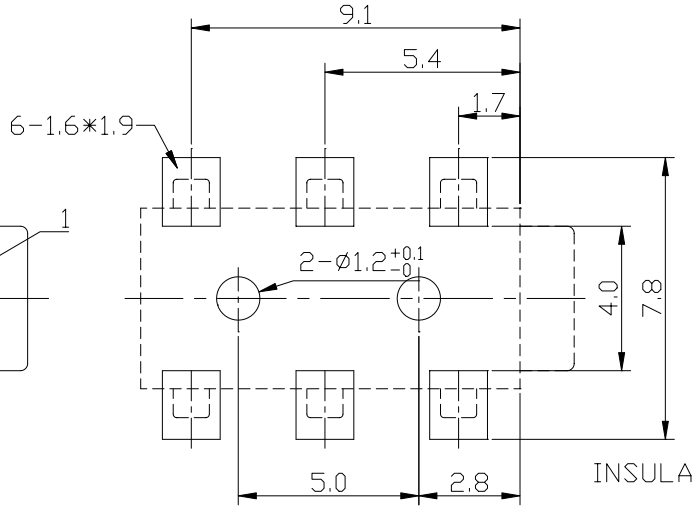

HOLE LAYOUT

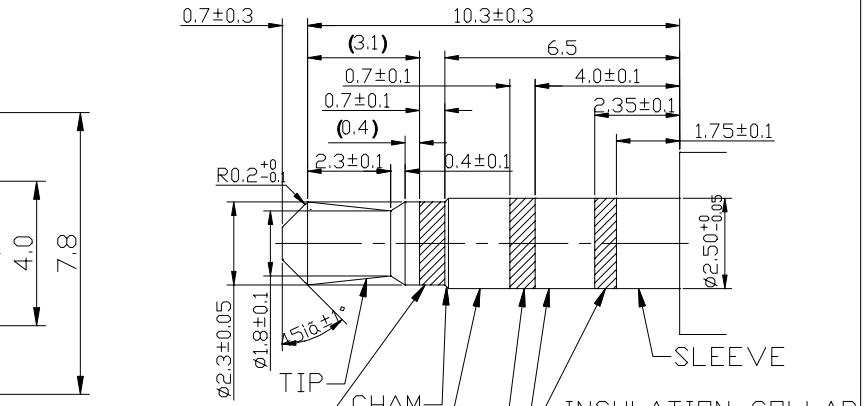

MATE PLUG

KWAN DA INDUSTRIAL CO.,LTD.

TITLE : PHONE JACK

MODEL : ST-198 □ (W162)

UNIT :	MM	DWN.		DATE	
SCALE :	5 : 1	CHK'D		DATE	
VERSION	01	APPD.		DATE	

TOLERANCE	ANGLE TOL
± 0.2mm	± 2

NO.	PART NAME	MATERIAL	QTY.	FINISHING
2	TERMINAL	PBS STRIP	6	Au PLATED
1	CASE	NYLON	1	BLACK/GRAY