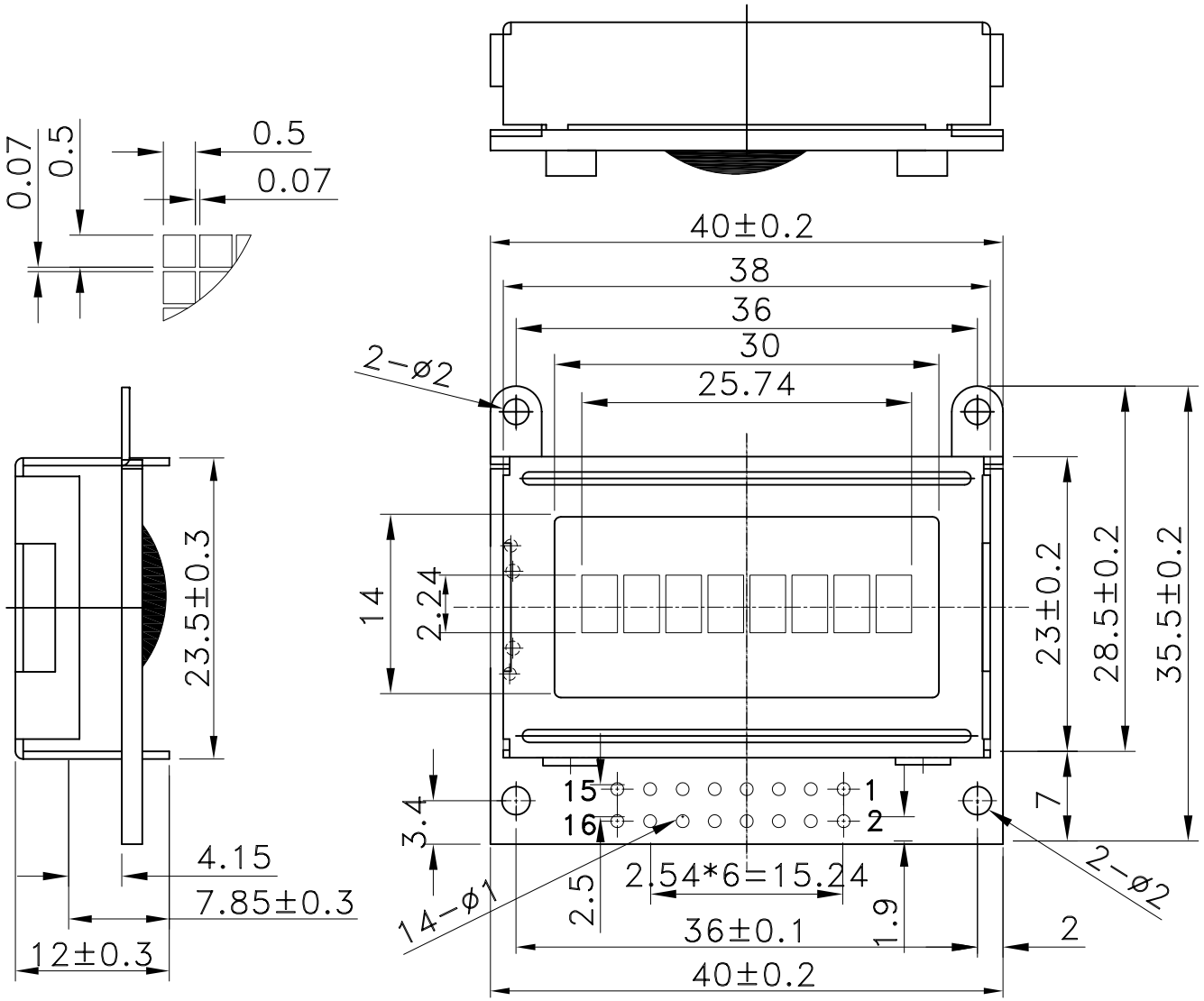

PIN FUNCTION

PinNo.	Symbol	PinNo.	Symbol
1	GND	9	DB2
2	VDD	10	DB3
3	VLCD	11	DB4
4	RS	12	DB5
5	R/W	13	DB6
6	E	14	DB7
7	DB0	15	LED+
8	DB1	16	LED−

深圳市新深辉显示技术有限公司
CHINA DISPLAY TECHNOLOGY CO.,LTD

VER.	REVISED RECORD	DATE	LCM SPECIFICATION										
A0	NEW ISSUE		1.DISPLAY TYPE	TN	5.VDD	5.0V	APPROVED BY			CUSTOM NO.		UNMARKED TOLERANCE	±0.2
A1			2.VIEWING DIRECTION	6 O'CLOCK	6.OPERATION TEMP.	0°C~50°C	CHECKED BY			DESIGN NO.& (VERSION)		UNIT	mm
A2			3.POLARIZER MODE	TRANSFLECTIVE	7.STORAGE TEMP.	-10°C~60°C	DRAWN BY	YXZ	06.11.03	MODEL NO.	SVM801BTKYE-1	SHEET	1 OF 1
A3			4.DRIVE METHOD	4.1/8DUTY,1/4BIASE	8.CONNECTOR	8.CONNECTOR	COB	BOTTOM LIGHT:Y-G				FAX NO:0755-82262915	