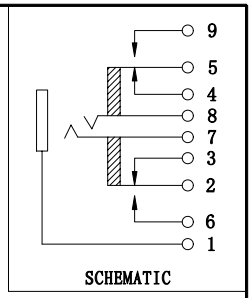

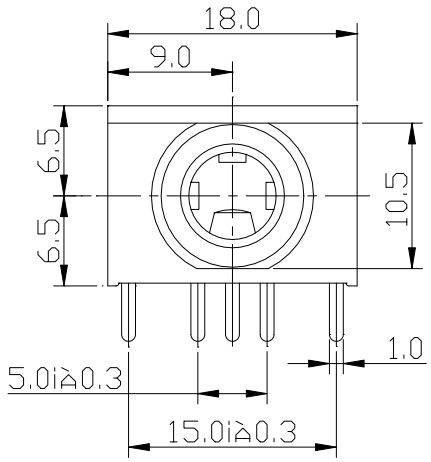

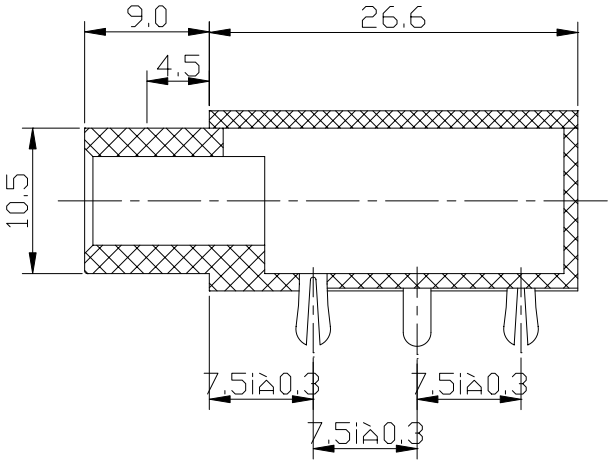

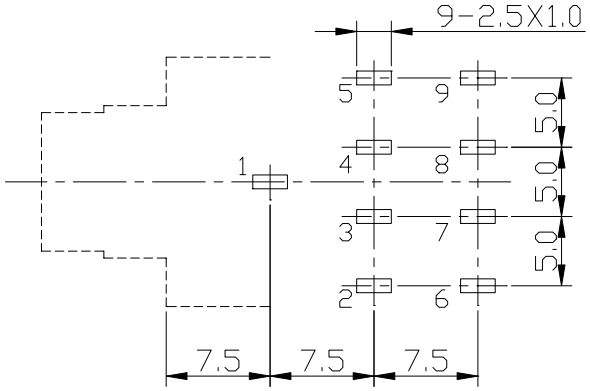

KWAN DA INDUSTRIAL CO.,LTD.

KD

TITLE : MONO PHONE JACK

MODEL : MJ-901

UNIT : MM	DWN.		DATE		TOLERANCE
SCALE : 2 : 1	CHK'D		DATE		<=5mm 0.10
VERSION	APPD.		DATE		> 5mm 0.20

ANGLE TOL

氣2

NO.	PART NAME	MATERIAL	QTY.	FINISHING