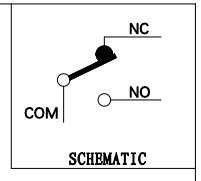

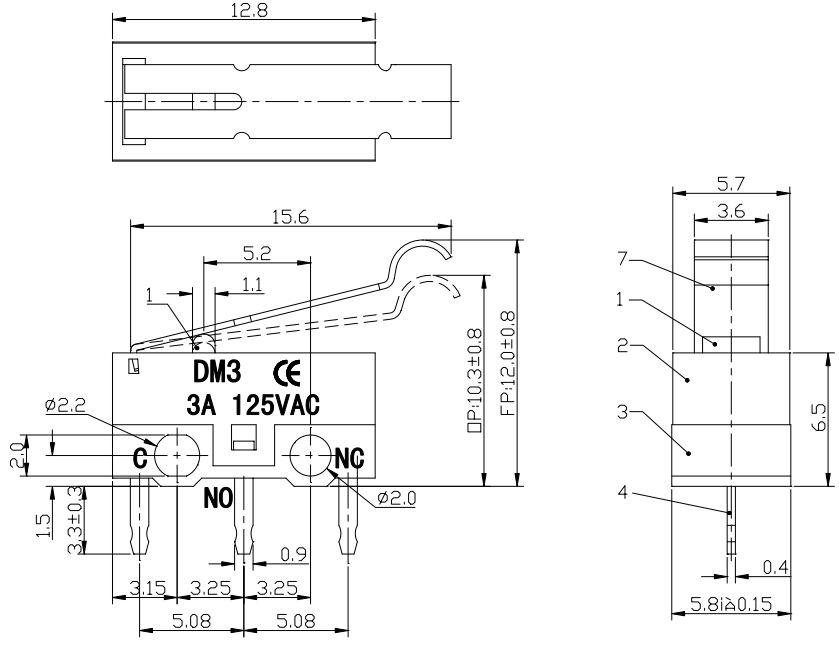

KWAN DA INDUSTRIAL CO.,LTD.

TITLE : MICRO SWITCH

MODEL : MX-109 3A 125V AC (W106)

UNIT :	MM	DWN.		DATE	
SCALE :	4 : 1	CHK'D		DATE	
VERSION	01	APPD.		DATE	

TOLERANCE	ANGLE TOL
<= 1.5mm 0.1	±2
> 1.5mm 0.2	

NO.	PART NAME	MATERIAL	QTY.	FINISHING
7	STEEL KNOB	SUS	1	NATURE
6	CONTACT POINT	SILVER	1	NATURE
5	SPRING PLATE	BeCu	1	NATURE
4	TERMINAL	BRASS STRIP	3	Ag PLATED
3	CASE	PC	1	WHITE
2	COVER	PBT	1	BLACK
1	BAR	POM	1	GRAY