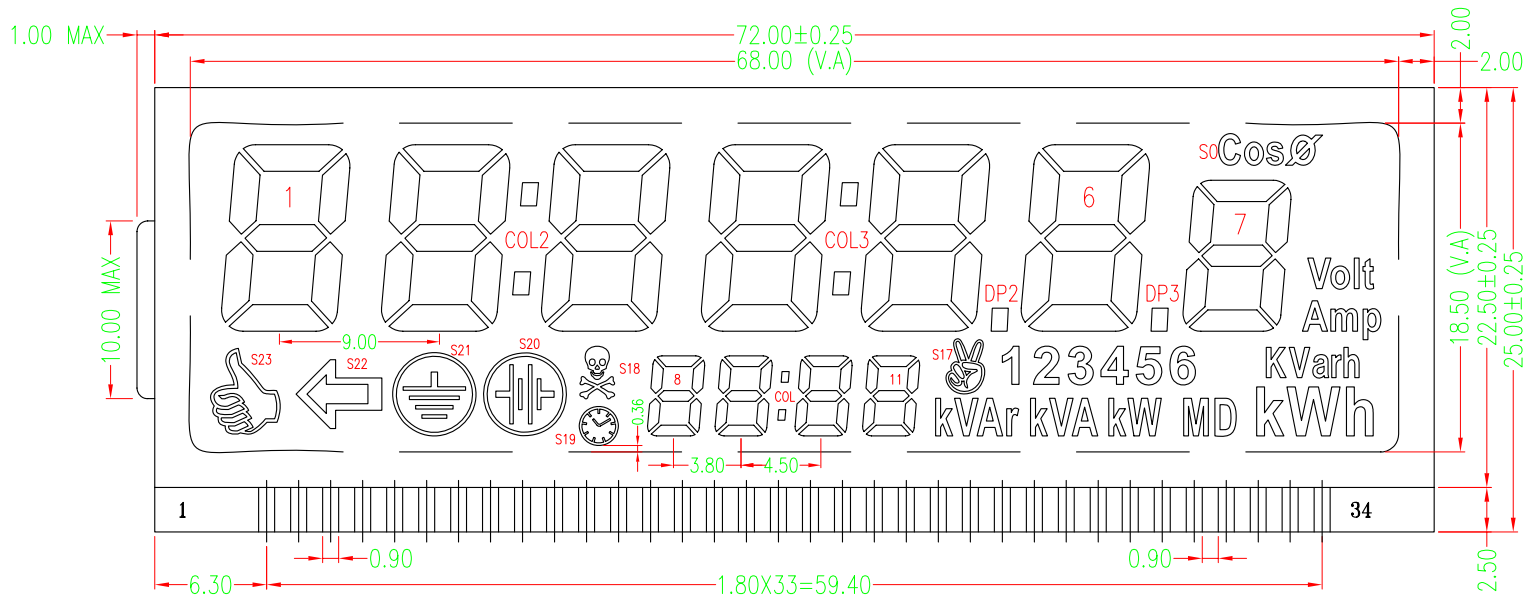

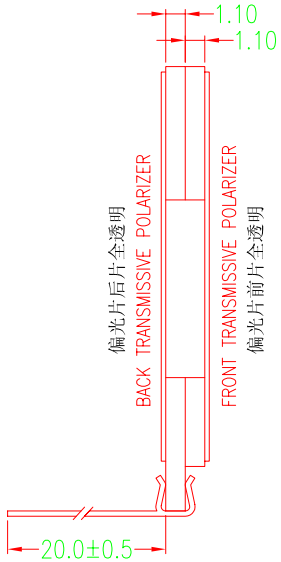

PIN	1	2	3	4	5	6	7	8	9	10	11	12	13	14	15	16	17
COM1	COM1	--	--	--	1F	1A	2F	2A	3F	3A	4F	4A	--	--	COM1	8D	8C
COM2	--	COM2	--	--	1G	1B	2G	2B	3G	3B	4G	4B	--	COM2	--	8E	8G
COM3	--	--	COM3	--	1E	1C	2E	2C	3E	3C	4E	4C	COM3	--	--	8F	8B
COM4	--	--	--	COM4	1D	S23	2D	S22	3D	S21	4D	S20	--	--	--	S19	8A

PIN	18	19	20	21	22	23	24	25	26	27	28	29	30	31	32	33	34
COM1	9D	9C	10D	10C	11D	11C	kVAr	kVA	kW	MD	--	7A	7F	6A	6F	5A	5F
COM2	9E	9G	10E	10G	11E	11G	S17	2	4	kWh	COL2	7B	7G	6B	6G	5B	5G
COM3	9F	9B	10F	10B	11F	11B	1	3	5	Amp	h	7C	7E	6C	6E	5C	5E
COM4	S18	9A	COL	10A	COL3	11A			6	Volt	KVar	S0	7D	DP3	6D	DP2	5D

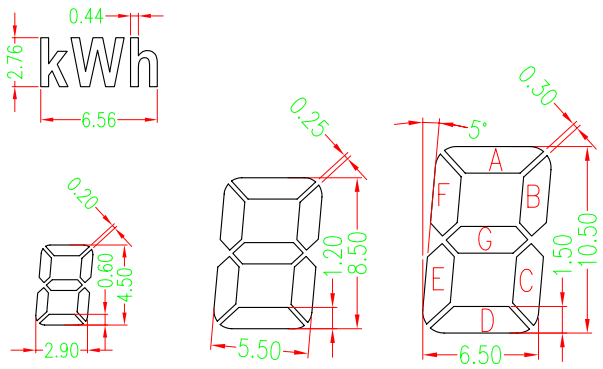

深圳深辉技术有限公司
SHEN ZHEN SHENHUI TECHNOLOGY CO.,LTD

1. DISPLAY TYPE	TN/POSITIVE	5. OPERATIVE VOLTAGE	3.0 V	APPROVED BY			CUSTOM NO.		UNITS	mm
2. VIEWING DIRECTION	6 O'CLOCK	6. OPERATIVE TEMP.	-30° C TO 80° C	CHECKED BY			DESIGN NO. & (VERSION)	SEQ1795/03(A3)	SCALE	
3. POLARIZER MODE	TRANSMISSIVE	7. STORAGE TEMP.	-35° C TO 85° C	DRAWING BY	GH	25/12/03	MODEL NO.		SHEET	1 OF 1
4. DRIVE METHOD	1/4 DUTY 1/3 BIAS	8. CONNECTOR	PIN	REMARK					FAX NO.:0755-82262915	