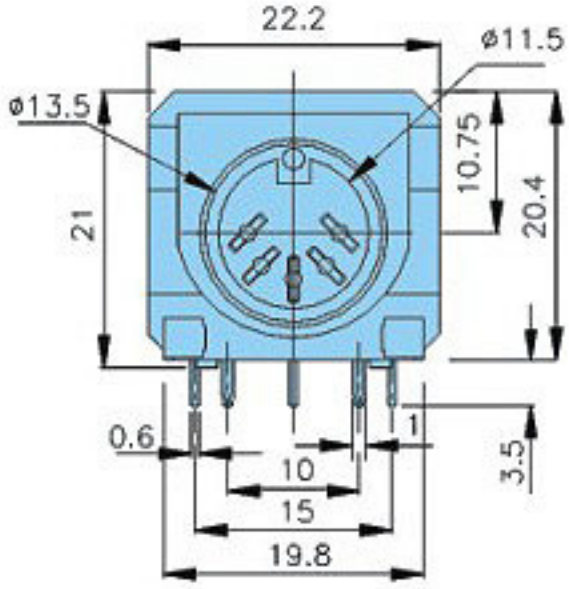
22.2
ø11.5
ø13.5
10.75
20.4
21
0.6
1
3.5
10
15
19.8

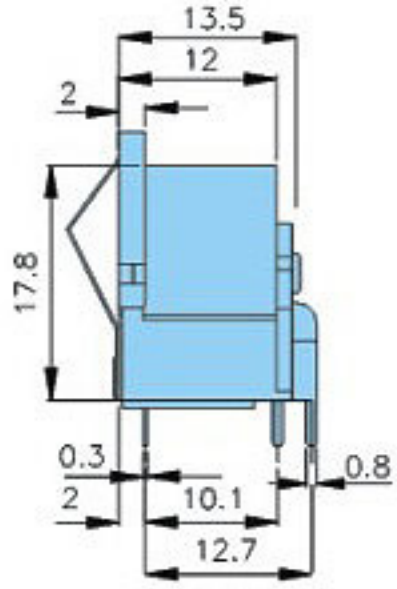
13.5
12
2
17.8
0.3
2
10.1
12.7
0.8

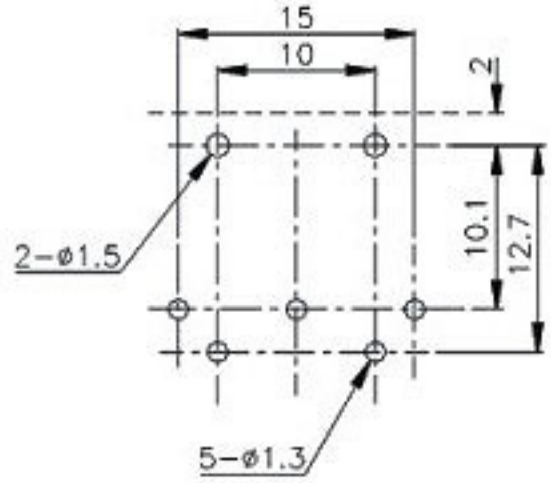
15
10
2
2-ø1.5
10.1
12.7
5-ø1.3