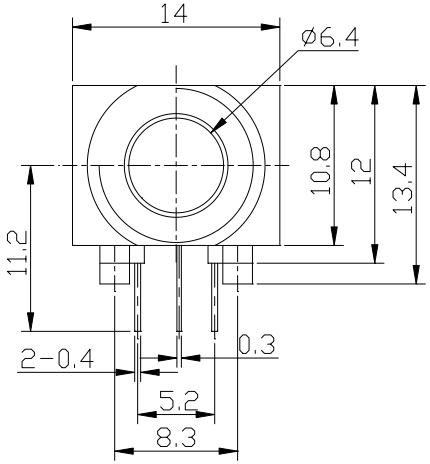

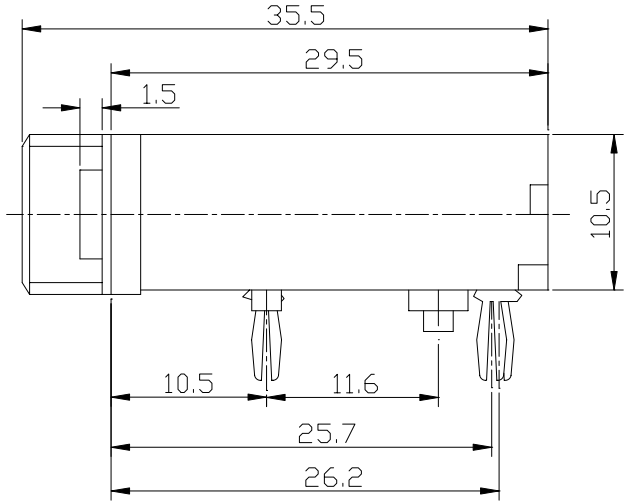

MODEL NO.	NEW MODEL NO.	FUNCTION	BUSHING	BUSHING COLOR	CONTACT FORM
MJ-093	J093-CC3SA	MONO	THREATED	BLACK	3
MJ-194	J093-CF2XA	STEREO	THREATED	BLACK	2

KD

KWAN DA INDUSTRIAL CO.,LTD.

TITLE : PHONE JACK

MODEL : MJ-093

UNIT :	MM	DWN.		DATE	
SCALE :	3 : 1	CHK'D		DATE	
VERSION	01	APPD.		DATE	

TOLERANCE	ANGLE TOL
<=5mm±0.1	±2°
>5mm ±0.2	

NO.	PART NAME	MATERIAL	QTY.	FINISHING