YDK-250F-6

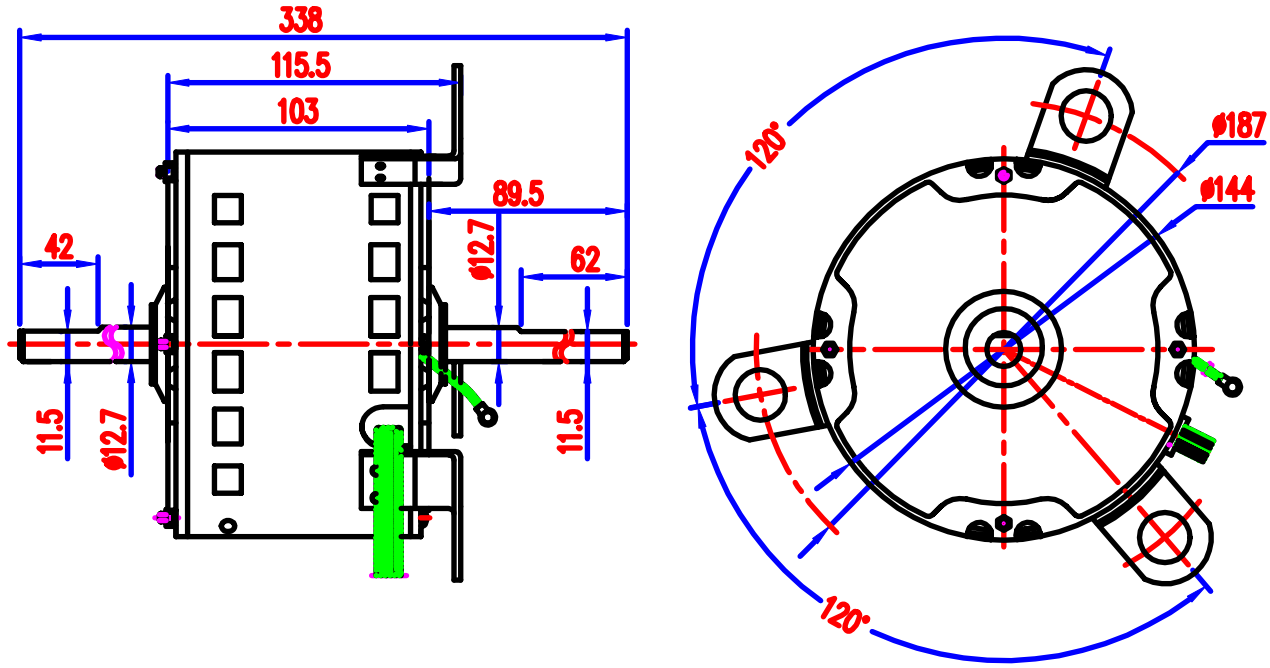

YDK-35B-4

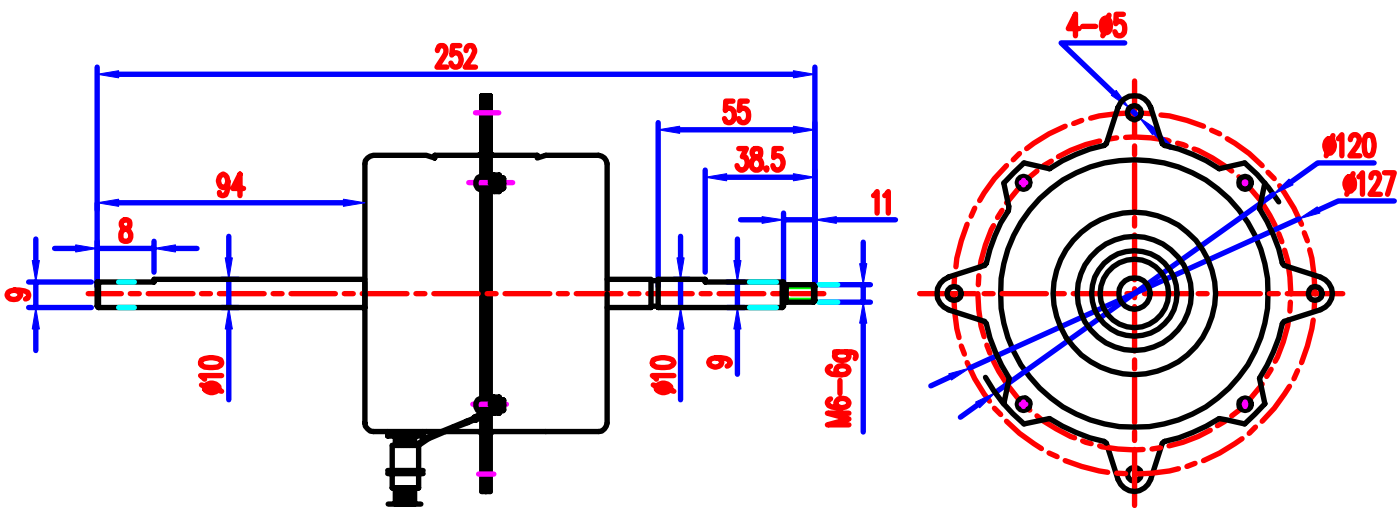

Motor Model	Voltage (V)	Frequency (Hz)	Speed (rpm)	Output Power(W)	Capacitance (μF)	Poles (P)	Use
YDK-250F-6	230	60	1015	250	5	6	Air-Conditioner fan motor
YDK-35B-4	220	50	1100	35	2.5	4	Air-Conditioner fan motor