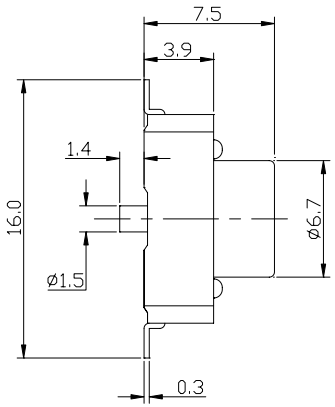

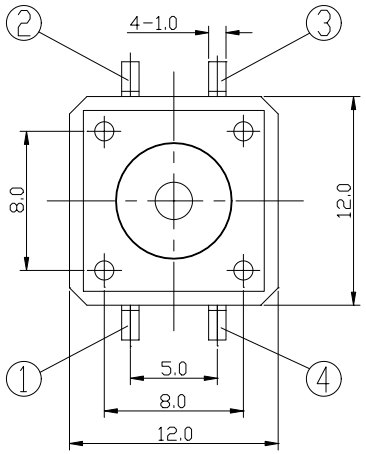

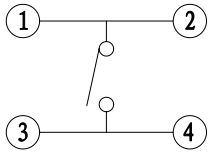

SCHEMATIC

MODEL NO	GUIDE PIN
TD-402AB	NO
TD-402AA	YES

KD

KWAN DA INDUSTRIAL CO.,LTD.

TITLE : TACT SWITCH

MODEL : TD-402AA

UNIT :	MM	DWN.		DATE	
SCALE :	3 : 1	CHK'D		DATE	
VERSION	01	APPD.		DATE	

TOLERANCE	ANGLE TOL
<= 1.5mm 0.1	±2
> 1.5mm 0.2	

NO.	PART NAME	MATERIAL	QTY.	FINISHING